□ □□□□□□□□□□

1. □□□□□

(1) □□□□□□□ S □□□□□□ H □□□□□ .

(2) □□□□□□□ H □□□□□ 50 □□□□□ K □□□□□□□□ P □□□□□

__<u>0.5</u>__ mm □□□□□□□□□□□□__<u>0.01</u>__ mm.

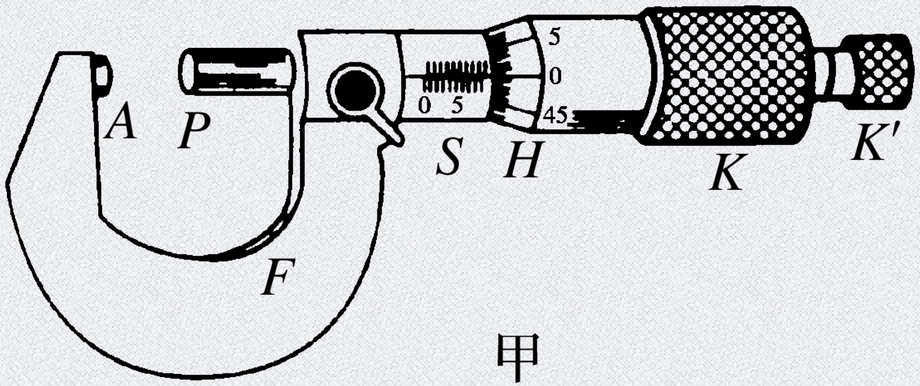

甲

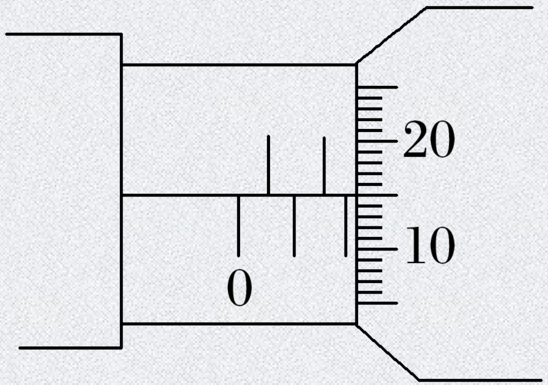

乙

[illegible](mm)[illegible](mm)([illegible])[illegible]

[illegible]([illegible])×0.01(mm).

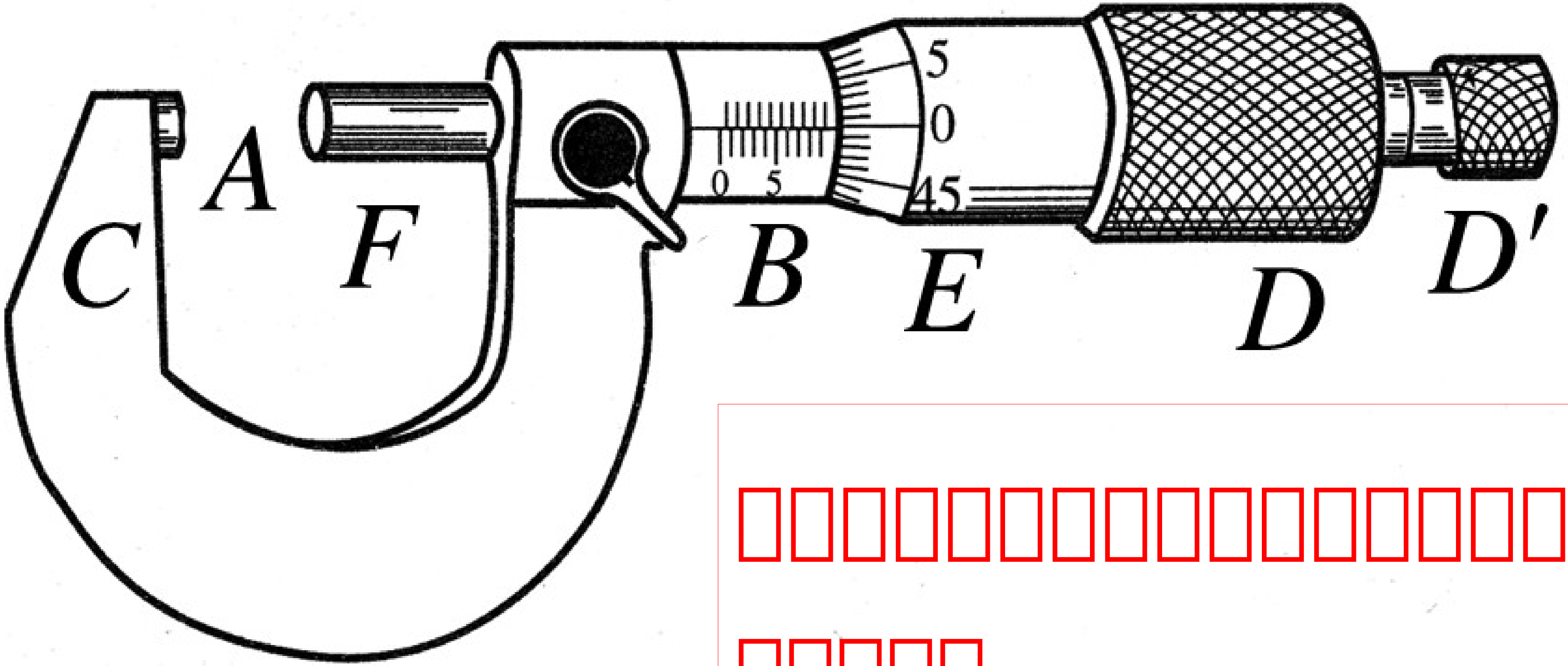

[illegible]

[illegible].

[illegible]

[illegible] [illegible]“[illegible]”[illegible]. [illegible] 50 cm.

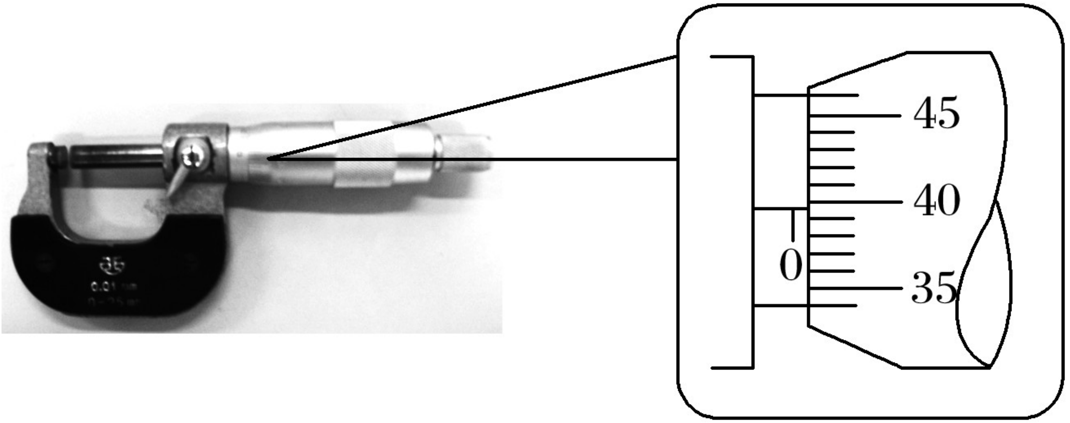

(1) [illegible]

0.398(0.395 [illegible] 0.399 [illegible]) mm([illegible]).

[illegible] [illegible] 0 mm [illegible] 39.8×0.01 mm [illegible] 0.398 mm.

([illegible] x [illegible] K [illegible]

[illegible] (x [illegible] $K\times$ [illegible]) mm

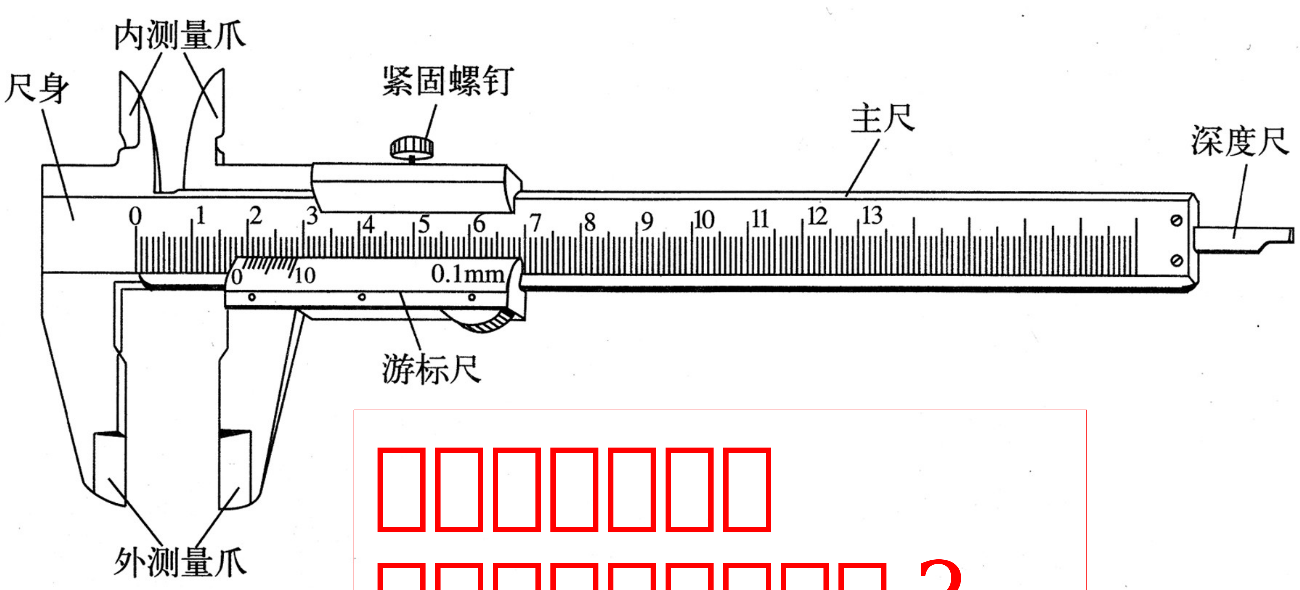

[illegible]

[illegible] ?

[illegible] ([illegible])	[illegible]	1 mm [illegible]	[illegible] ([illegible])
10	9 mm	0.1 mm	0.1 mm
20	19 mm	0.05 mm	0.05 mm
50	49 mm	0.02 mm	0.02 mm

[illegible]

[illegible] 0 [illegible]

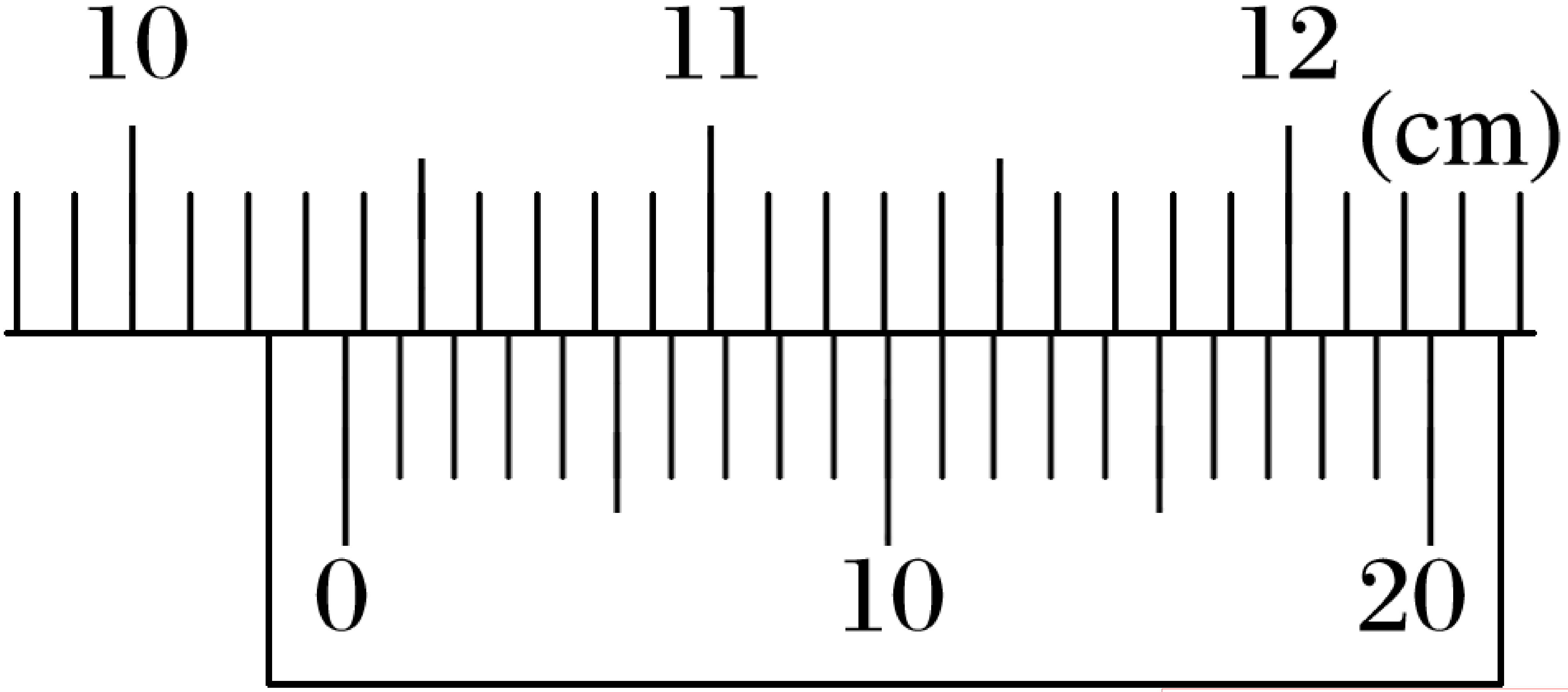

10.355cm

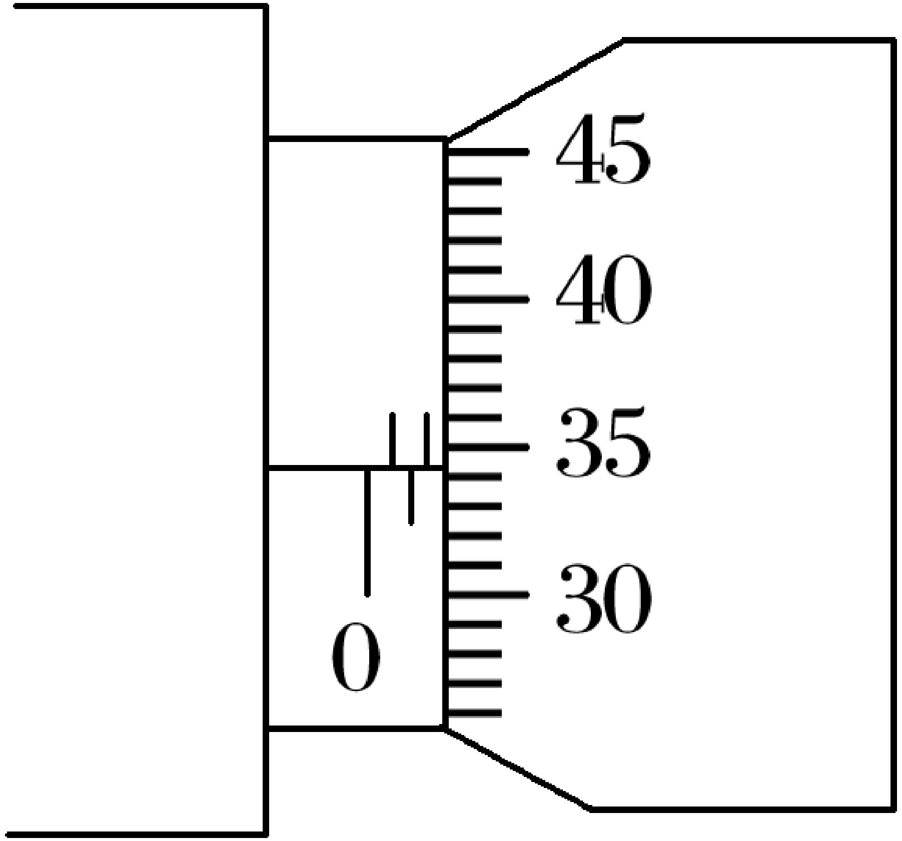

甲

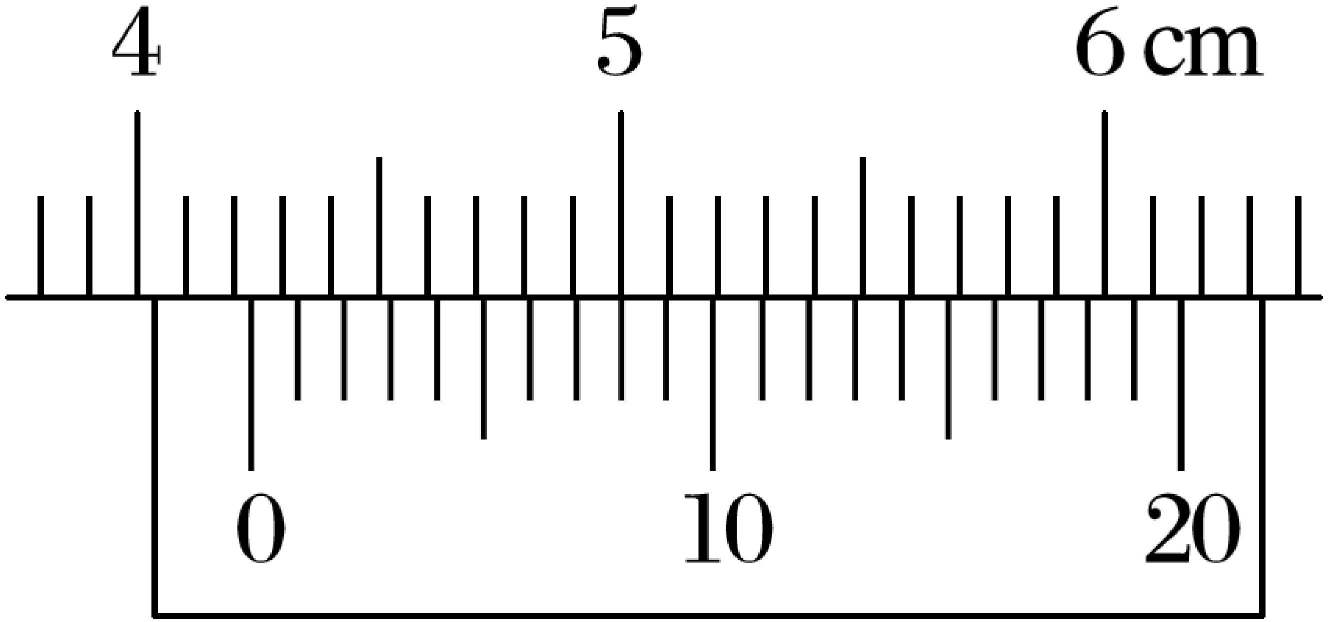

乙

1.844mm(1.842 □ 1.845mm □□) 4.240cm

[illegible]

1. [illegible].

2. [illegible].

3. [illegible] 5 [illegible]

[illegible]

1. [illegible] R(R [illegible] $\frac{U}{I}$). [illegible] ___ [illegible]

[illegible] 0 [illegible] ______ [illegible]. [illegible]

[illegible].

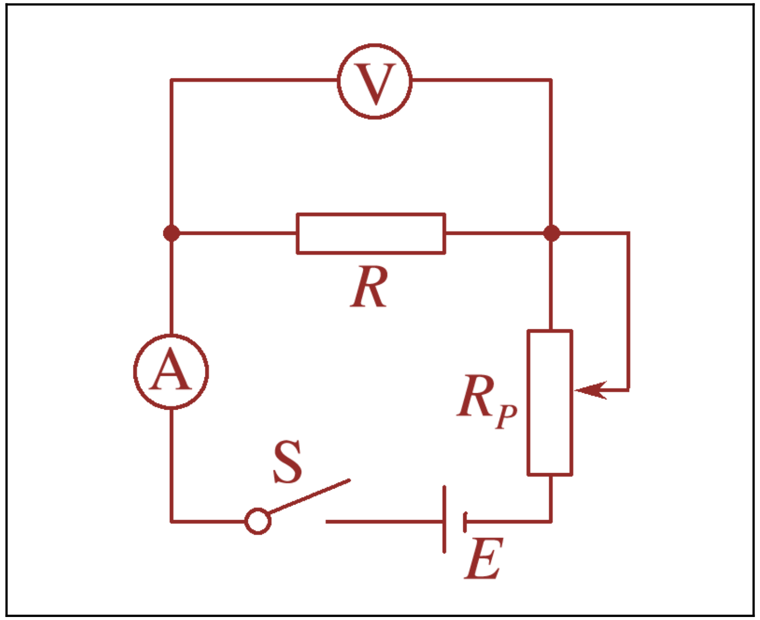

[illegible]

2. [illegible]____[illegible]____[illegible] l [illegible]____[illegible]____[illegible] d [illegible]

[illegible] S(S [illegible] $\frac{\pi d^2}{4}$).

3. [illegible] R [illegible]__ $\rho\frac{l}{S}$ __[illegible] ρ [illegible] $\frac{RS}{l}$ [illegible] $\frac{\pi d^2 R}{4l}$ [illegible]__ $\frac{\pi d^2 U}{4lI}$ __[illegible].

[illegible]

[illegible]____[illegible]____[illegible]____

__[illegible]__.

[illegible]

1. [illegible]

(1) [illegible] ____[illegible]____ [illegible].

(2) [illegible] ________ [illegible]

[illegible] 3 [illegible] [illegible].

(3) [illegible].

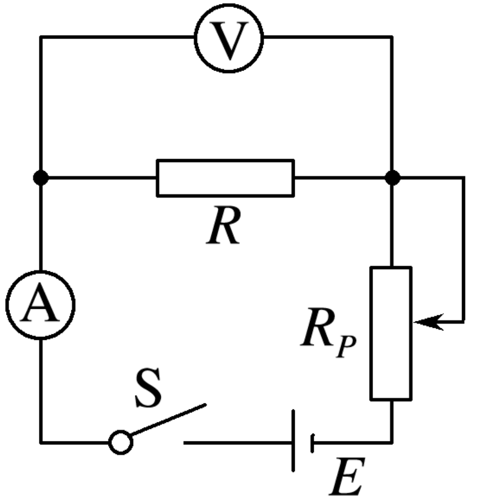

(4) [illegible]

[illegible] [illegible] S. [illegible]

[illegible] I [illegible] U [illegible] S.

(5) [illegible].

2. □□□□

□□ R □□□□□□□□□□□□□□□

(1) □□□□□□□□□□□ U □ I □□□□□□ R □ $\frac{U}{I}$ □□□□□□□□□□□□□□□□□□□□□.

(2) □□□□□□□ I □ U □□□□□□□□ U □ I □□□□□□□□□□□□□□ □□ □□□□

R.

3. [illegible]

(1) [illegible]______[illegible].

[illegible]

(2) [illegible]____[illegible].

(3) [illegible] l [illegible] ([illegible]) [illegible] 3 [illegible]

[illegible]

______________[illegible] d.

(4) [illegible] ([illegible] 0 [illegible] 0.6 A [illegible]) [illegible].

[illegible]

[illegible] [illegible]

1. [illegible]

[illegible] { [illegible] / [illegible] }

[illegible] ([illegible]

[illegible]).

- [illegible] 21:10 [illegible]
  [illegible]
- [illegible] 2.1-2.6 [illegible]
  [illegible] 19:00 [illegible]

2. [illegible]

[illegible]

[illegible].

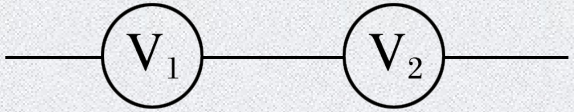

甲

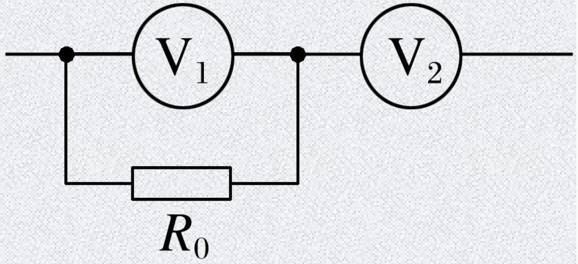

乙

(1)[illegible] V_1 [illegible] R_1 [illegible] V_2 [illegible] $R_2 = \frac{U_2}{U_1}R_1$.

(2)[illegible] $I_{V1} \ll I_{V2}$ [illegible] V_1 [illegible] R_1 [illegible] V_1 [illegible] R_0 [illegible] V_2 [illegible] $R_2 = \frac{U_2}{\frac{U_1}{R_1} + \frac{U_1}{R_0}}$.

□ □□□□□□□□□□ R_x □□□.

1. □□□□□ + □□□

□□□□ 0.01A □□ 1/3 □□□□□□□□

□□□□□□□□ - □□

□□□□ R_x □□□□□ 600 Ω □

□□ E □□□□□□ 6 V □□□□□□□□□

□□□ V_1 □□□□ 0 □ 500 mV □□□ r_1 □ 1 000 Ω □

□□□ V_2 □□□□ 0 □ 6 V □□□ r_2 □□ 10 kΩ □

□□□ A □□□□ 0 □ 0.6 A □□□ r_3 □□ 1 Ω □

□□□□ R_0 □ R_0 □ 60 Ω □

□□□□□ R □□□□□□ 150 Ω □

□□□□□□ S □□□□□□□.

□□□□□□□

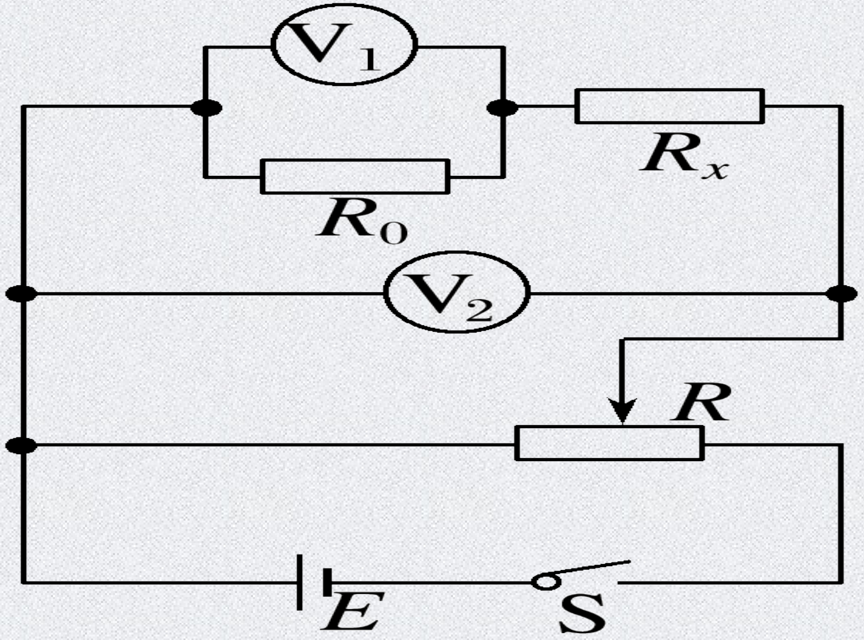

2.Rx □□□□□

$$I=\frac{U_1}{r_1}+\frac{U_1}{R_0}$$

$$R_x=\frac{U_2-U_1}{I}=\frac{(U_2-U_1)R_0r_1}{U_1(R_0+r_1)}$$

3. □□□

□□□□□□□□□□□□□□□□□□□□□□□□□□□□□□□□□.

(1)□□□□□□□□□□□□□□□□□□□□□□□□□□□□ A_1□□□

R_1□□□□□ A_2□□□ R_2□ $\frac{I_1R_1}{I_2}$.

(2)□□□□□□□□□□□□□□□□ $U_{A2}\gg U_{A1}$□□□□□□ A_1□□□ R_1□

A_1□□□□□□□ R_0□□□□□□□ A_2□□□ R_2□ $\frac{I_1(R_1□\ R_0)}{I_2}$.

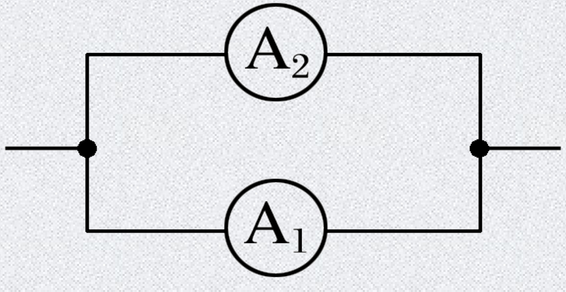

甲

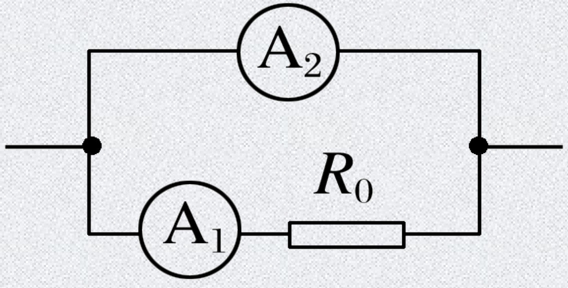

乙

3. [illegible]

1. [illegible]

[illegible].

[illegible] [illegible]. [illegible]

A. [illegible] G_1 [illegible] r_1 [illegible] 300 Ω [illegible] 5.0 mA [illegible]

B. [illegible] G_2 [illegible] r_2 [illegible] 300 Ω [illegible] 1.0 mA [illegible]

C. [illegible] R [illegible] 1 200 Ω [illegible]

D. [illegible] R_1 [illegible] 20 Ω [illegible]

E. [illegible] R_2 [illegible] 2 000 Ω [illegible]

F. [illegible] E [illegible] 3.0 V [illegible]

G. [illegible] S [illegible].

3. [illegible] P [illegible] G_1 [illegible] G_2 [illegible] I_1 [illegible] I_2 [illegible] I_2 [illegible] I_1 [illegible]. [illegible] k [illegible] 0.18 [illegible] r_1 [illegible] ________ Ω.

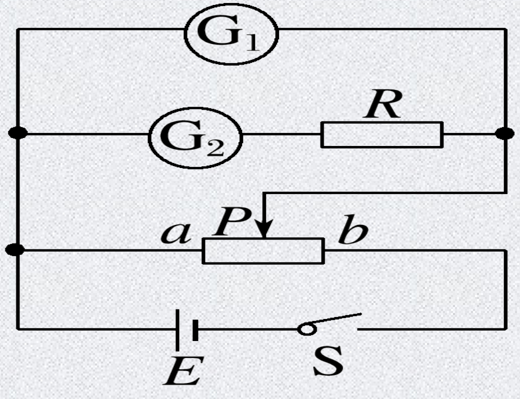

甲

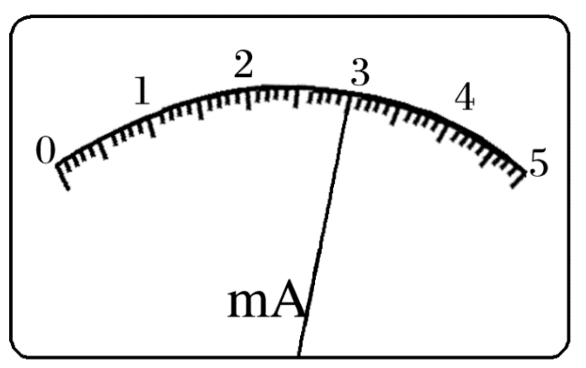

丙

2. [illegible]

3.00mA

4. [illegible] R [illegible]

4. □□□

(1) □□□□□□□

(2) □□□□□

S □□ 2 □□□□□ □□Ⓐ□□□ 1 □□□□□ R □□ □□□□□□□□□Ⓐ

□ R_x □ R.

(3) □ □

□ Ⓐ □ □ □ □ □ □ □ □ □ □ □ □ □ □ □ □ □

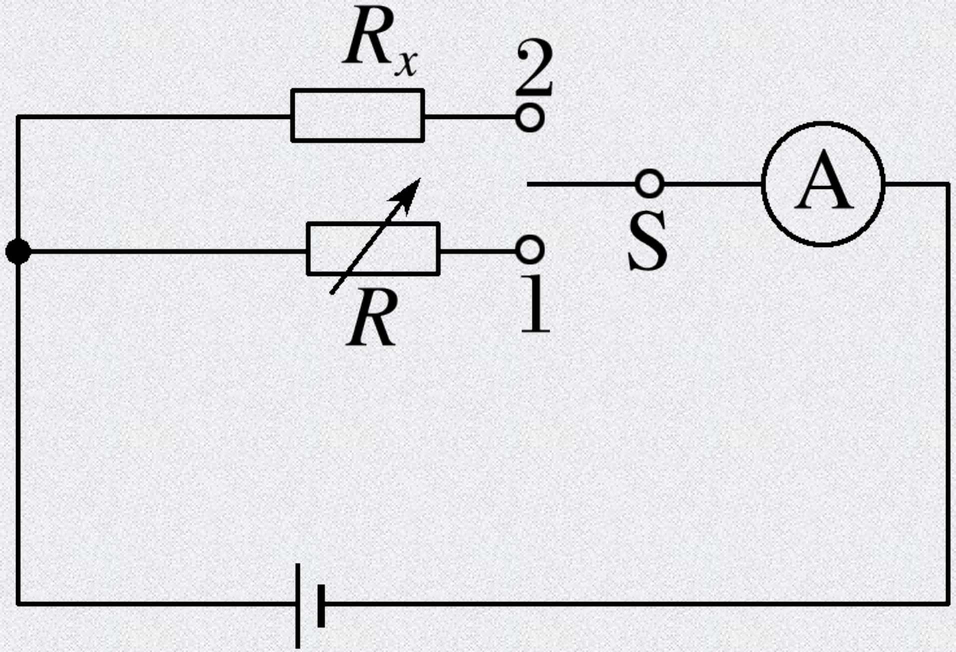

□ □□□□□□□□V□□□□□□□□□□□□□□□□□□□□.□

□V_0□□□□□□□R_0□R□□□□□□□□□□□□□S□

S_1□□□□□□□□□□□□□□□□□□E□□□.

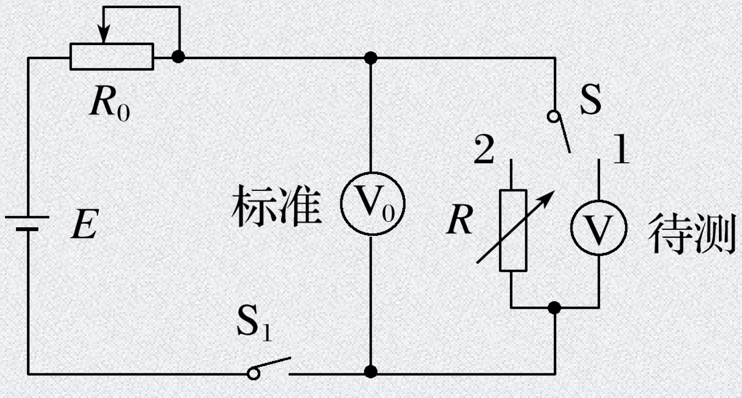

甲

□□□□□□□

① □ S □□□□ 1 □□□ S_1 □□□ ___R_0___ □□□□□□□□□□□□□□□□□□□□□□

___□□□□□V_0___□□□U□

② □□□S□□□□2□□□R_0□□□□□______□□___R___ ___□□□□□V_0□□U___□□□□□R□

□□□

③ □□□□□□□□□□□R□□□___□□□___□□□□□□□□□□□□□□□□.

5. □□□

(1) □□□□□

(2) □□□□□

①R_1 □□□□□□□□□□□ S_1 □□□ R_1 □□□□Ⓖ□□□□□□.

② □□ R_1 □□□□□□□ S_2 □□□ R_2 □Ⓖ□□□□□□□□□□□□□□ R_2 □□.

③R_{g}□□ R_2.

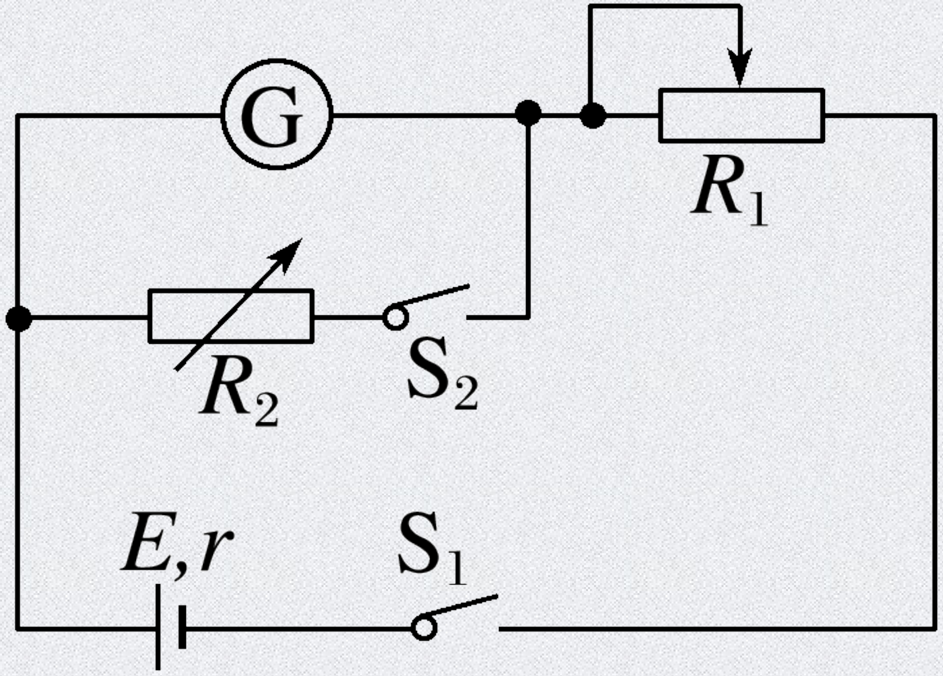

(3)□□□□□ I_{R2}□□□□□Ig/2 ？

□□ S_2□□R_2□R_g□□□□$R_{□}<R_g$□□□$I_{□}>I_g$□□□Ⓖ□□□□$\frac{I_g}{2}$□

□□$I_{R2}>\frac{I_g}{2}$□□□$R_2<R_g$□□$R_{g□}<R_g$.

□□□$R_1\gg R_g(R_1\gg R_2)$□□$R_{g□}\approx R_g$. □□□□□□□□□□□□□

□□□$R_1\gg R_g$□$R_1\gg R_2$□□□□□□□□□□□□□R_1□□□□□□□□□□□

□□□□□□□□□□□□□.

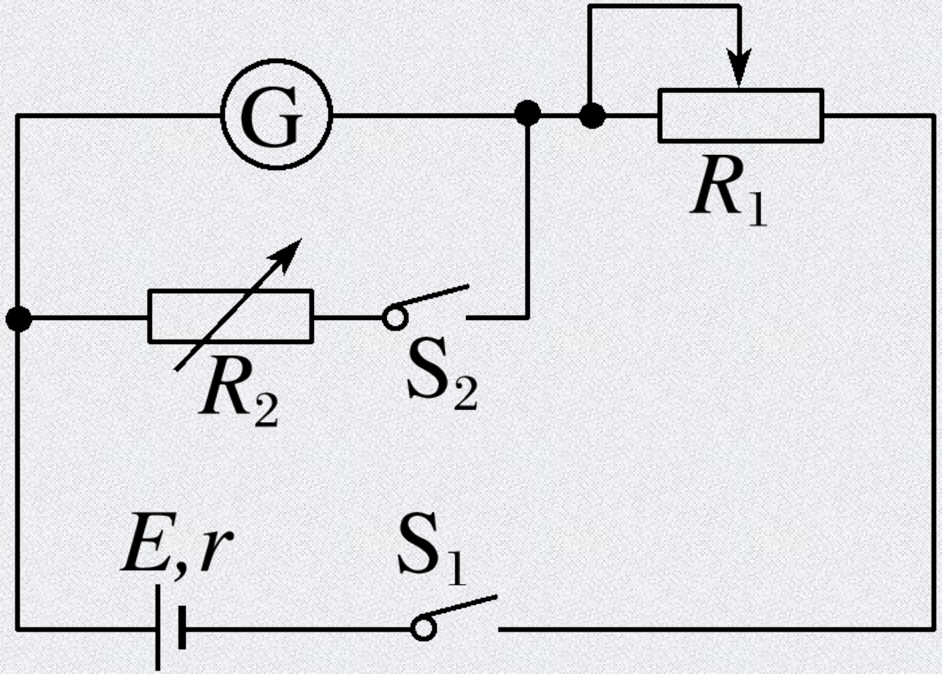

(1) [illegible] G [illegible]. [illegible] R [illegible] S_1 [illegible] R [illegible] G [illegible] S_2 [illegible] R' [illegible] G [illegible] ________ [illegible] R' [illegible] G [illegible]. [illegible] G [illegible] ________.([illegible]“[illegible]”[illegible]“[illegible]”)

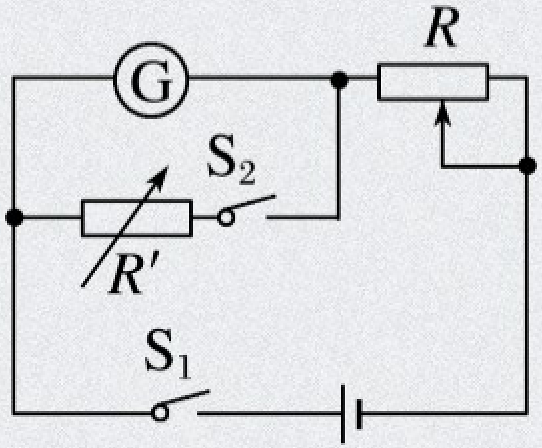

乙

[illegible]

[illegible]

(2) [illegible] G [illegible] ________.([illegible]“[illegible]”[illegible]“[illegible]”)[illegible]